114-000-00866 Applicazione PTO UNI / POMPA SAE A - Z11 - *Adaptor UNI PTO / SAE A PUMP - Z11*

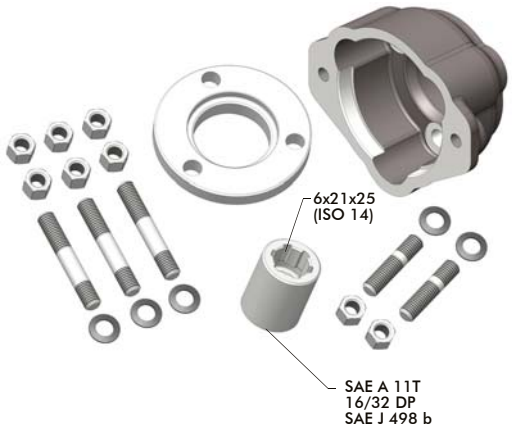

Coppia teorica trasmissibile
Theoretical transmitted torque
150 Nm

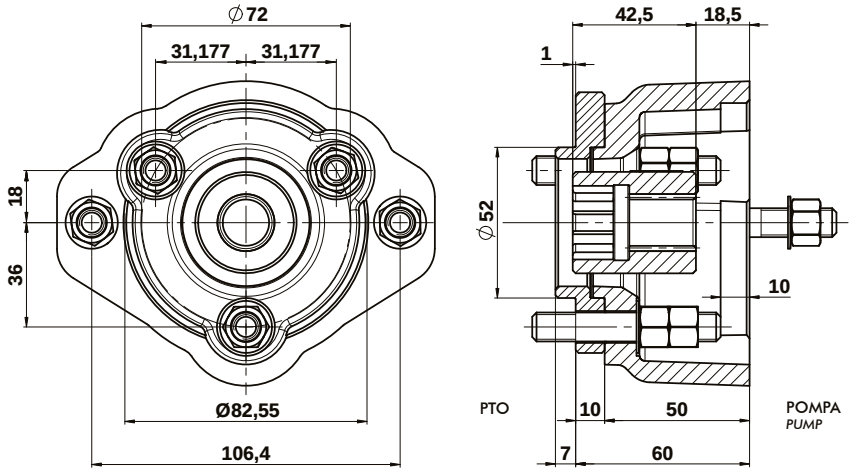

114-000-00599 Applicazione PTO UNI / POMPA 2P - *Adaptor UNI PTO / 2P PUMP*

Coppia teorica trasmissibile
Theoretical transmitted torque
150 Nm

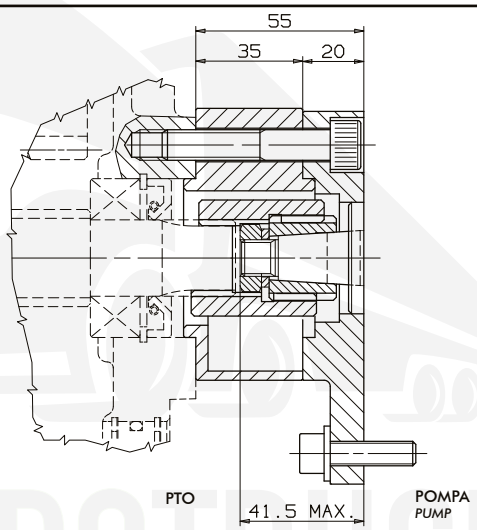

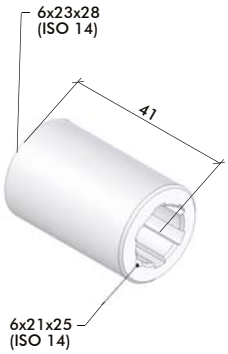

114-000-00071 Applicazione PTO ISO / POMPA UNI - *Adaptor ISO 4-hole PTO / UNI 3-hole PUMP*

Coppia teorica trasmissibile
Theoretical transmitted torque
400 Nm

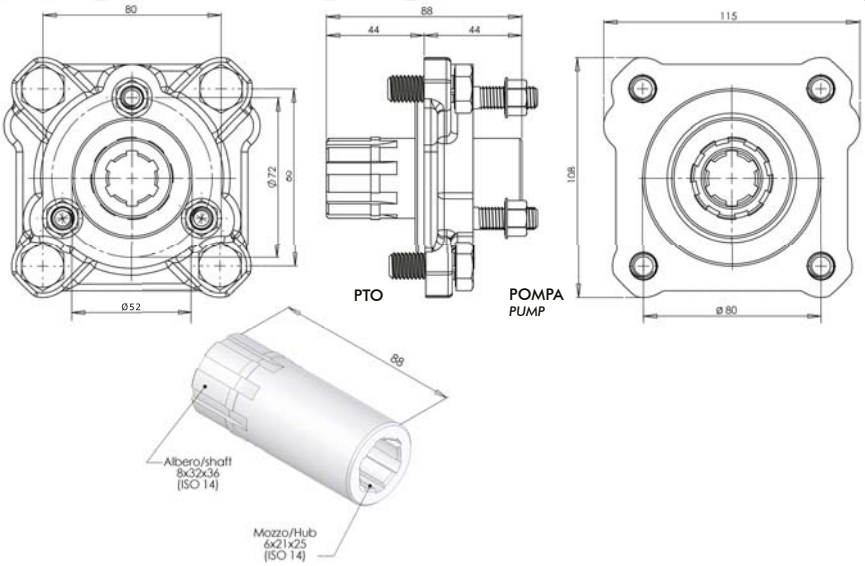

Data: Lunedì 07 settembre 2020
Codice foglio:997-114-11701 Rev: AU

HYDROTRUCK OMFB Hydraulic Components
AUTORIZOVANÝ PRODEJCE
www.hydrotruck.cz
info@hydrotruck.cz
Hydrotruck s.r.o.
Tovačovská 3457/4a
750 02, Přerov
Česká republika

COMPANY WITH
QUALITY SYSTEM
CERTIFIED BY DNV GL
= ISO 9001:2015 =